Information Series 123

NATIONAL ASPHALT PAVEMENT ASSOCIATION

Recycling Hot Mix Asphalt Pavements

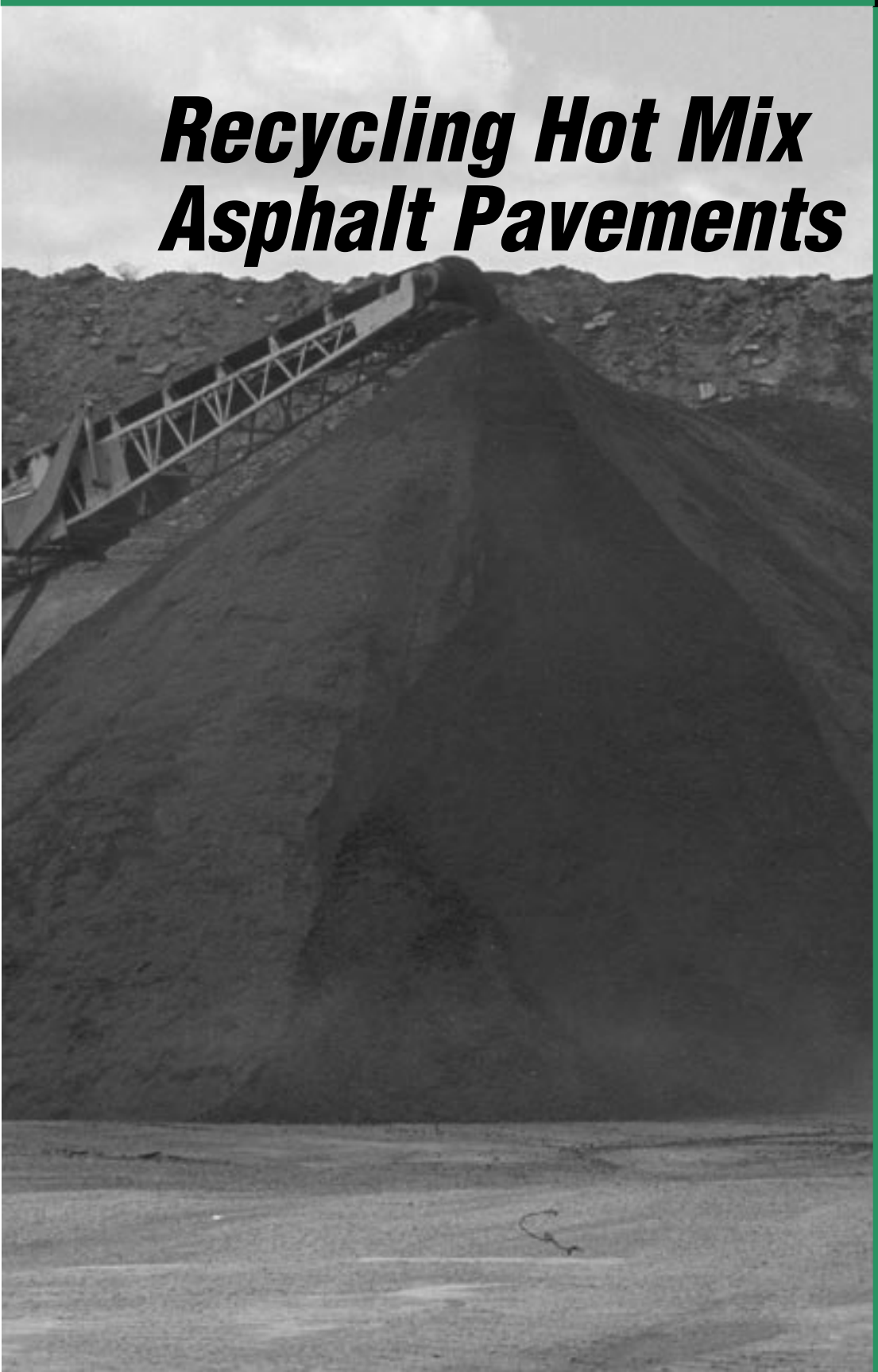

ASPHALT 100% RECYCLABLE

This publication is provided by the Members of the National Asphalt Pavement Association (NAPA), who are the nation's leading Hot Mix Asphalt (HMA) producer/contractor firms and those furnishing equipment and services for the construction of quality HMA pavements.

NAPA Members are dedicated to providing the highest quality HMA paving materials and pavements, and to increasing the knowledge of quality HMA pavement design, construction, maintenance and rehabilitation. NAPA also strongly supports the development and dissemination of research, engineering and educational information that meets America's needs in transportation, recreational and environmental pavements.

NATIONAL ASPHALT PAVEMENT ASSOCIATION

NAPA Building ■ 5100 Forbes Blvd. ■ Lanham, MD 20706-4407
Tel: (301) 731-4748 ■ Fax: (301) 731-4621

Information Series 123

Printed 4/96

Recycling Hot Mix Asphalt Pavements

NATIONAL ASPHALT
PAVEMENT ASSOCIATION
NAPA Building ■ 5100 Forbes Blvd. ■ Lanham, MD 20706-4407
Tel: (301) 731-4748 ■ Fax: (301) 731-4621

Information Series 123

Abstract

Since the mid-1970s, tens of millions of tons of Reclaimed Asphalt Pavement (RAP) have been used to produce recycled Hot Mix Asphalt that has the same performance characteristics as hot mix made with all virgin materials. The use of RAP has effected substantial savings for both public and private sector users.

The purpose of this publication is to provide a new, updated document on "How to Recycle," summarizing for producers and agencies the equipment and methods which are being successfully used to reclaim, size, store, and process RAP in various types of Hot Mix Asphalt facilities throughout the country. A discussion is also included for calculating the cost of using and processing RAP.

Key Words:

Reclaimed Asphalt Pavements
RAP
Recycling
Handling RAP
Processing RAP

Acknowledgement: This document was developed by Terry Young, a consultant to NAPA. Staff support for editorial review and publication was provided by Jim Warren, former NAPA Director of Professional Development, and Dale Decker, NAPA Vice President—Research & Technology.

Recycling Hot Mix Asphalt Pavements

Introduction

Although experiments in recycling Hot Mix Asphalt (HMA) pavements had been conducted for decades when NAPA published its first *Recycling Report* in 1977, the concept of recycling Hot Mix Asphalt was, for all practical purposes, brand new. Agencies and contractors were unsure of the quality of the final recycled hot mix product and unsure of the long-term performance characteristics.

Since that time, tens of millions of tons of production have proven that Reclaimed Asphalt Pavement (RAP) can be used to produce recycled hot mixes that have the same performance characteristics as hot mix made from all virgin materials, and that substantial savings are available for public and private users by using RAP in mixes. Much has been written about projects constructed with recycled hot mix documenting the substantial savings from recycling.

The purpose of this publication, however, is not to tread over the well-worn ground of "Why Recycle?" Its purpose is to provide a new, updated document on "How To Recycle," summarizing for producers and agencies the equipment and methods others are successfully using to reclaim, size, store, and process RAP in various types of Hot Mix Asphalt facilities throughout the country. A discussion is included in the Appendix for calculating the cost of using and processing RAP.

Reclaiming Existing Hot Mix Asphalt Pavements

RAP is typically generated through two reclamation procedures: milling and full-depth removal.

Special machines, with a rotating drum holding cutting teeth, can "mill" or "grind" a specific depth from the existing pavement without disturbing the base layers or subbase of the pavement (Figure1).

Milling is frequently used in a rehabilitation program where an upper layer of an existing pavement is removed and replaced with new pavement to lengthen the pavement's service life. In this process, curbs and structural clearances (bridges and over-passes for instance) can be maintained, yet the pavement structure can be improved.

Milled RAP has the additional benefit of being ready to recycle immediately without additional processing. The RAP from a single layer typically has uniform properties (RAP gradation, aggregate gradation, asphalt content, and asphalt characteris-

FIGURE 1
Milling Machine

Wirtgen America, Inc.

tics). This is because the RAP typically has come from a specific site where the pavement was consistent when placed. For this reason, millings are frequently segregated and identified in separate stockpiles at a storage location.

The pavement can also be removed completely in a total reconstruction. Here, bulldozers or front-end loaders break the entire pavement structure into manageable slabs and load them into trucks for transportation to a reprocessing site. The slabs are then crushed to a usable size for recycling.

RAP that has been removed in full-depth fashion might be segregated at the storage location like millings, but this management practice varies based primarily on the quantity of the RAP. Large quantities of uniformly consistent, full-depth RAP may be segregated for crushing and sizing later because the RAP will prove consistent in stone gradation, asphalt content, and asphalt characteristics after it is crushed and sized.

Frequently, however, pavement that has been removed in full-depth fashion arrives at the plant from various sites, and in small quantities. For this reason, full-depth RAP is often stored together in a common pile for blending and processing. The RAP is later crushed down to the largest aggregate size, or the stone in the RAP is actually decreased in size in an effort to create a consistent product from several different sources. Experience has shown that with this type of thorough blending and crushing, a RAP product with consistent stone gradation **and** asphalt content can be achieved.

Processing and Storing RAP for Future Recycling

Millings from a single source are typically consistent in their gradation and their composition (aggregate gradation, asphalt content, and asphalt characteristics). Material below 2 inches in size is used at practically all facilities without further processing. Larger particles of millings, however, take longer time to reblend with the new hot mix materials. For this reason, scalping screens are typically installed between the RAP cold feed bin and the transfer belt conveyor in the HMA facility. Many producers use a "RAP breaker" or "lump breaker" which resembles a small roll crusher, positioned between the bin and belt (Figure 2). This can be used with or without a scalping screen. Larger RAP particles passing between the rollers are reduced in size, allowing for better heat transfer and more complete mixing.

FIGURE 2
RAP Breaker

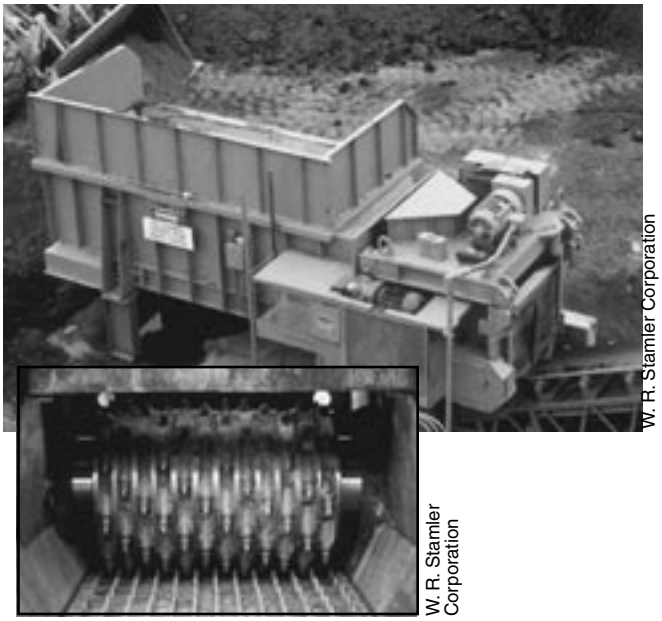
W. R. Stamler Corporation

W. R. Stamler Corporation

These "RAP breakers" or "lump breakers" are available from many different suppliers. Some models have a more aggressive tooth pattern than others, almost resembling a small milling machine head. Some more closely resemble a small roll crusher. These machines are not designed for extensive crushing and downsizing of the RAP material. They are designed for the occasional large piece of RAP from a milling operation that finds itself in the RAP stockpile, or for larger particles of processed RAP that have reagglomerated during stockpiling.

Full-depth RAP, or RAP that arrives at the facility in large sizes, must be recrushed prior to recycling into a new pavement. Several types of crushers and crushing configurations can be used, but most contractors have settled on the following equipment as being most effective and efficient.

Horizontal Impact Crushers

Horizontal impact crushers have solid breaking bars fixed to a solid rotor (Figure 3). RAP is crushed as a result of impact with the breaking bars and a striker plate. The faster the rotor speed, and the smaller the distance between the striker plate and the breaking bar, the smaller the gradation of the crushed product. The slower the rotor speed, and

FIGURE 3
Horizontal Impact Crusher

Nordberg, Inc.

FIGURE 4
Hammermill Impact Crusher

Cedarapids

the greater the distance between the striker plate and the breaking bar, the larger the gradation of the crushed product.

Horizontal impact crushers are typically used as both the primary and as a secondary crusher by recirculating the oversize back through the crusher. However, they can be used as a secondary crusher, with the primary crusher being a jaw-type to handle the very large slabs of full-depth RAP.

Hammermill Impact Crushers

Hammermill impact crushers are similar to solid bar impactors, but the breaking bars pivot on a rotor creating a swing-hammer type action (Figure 4). During operation, the hammers remain extended based on the centrifugal force of the rotor and function very similar to a solid bar impactor. With foreign material (such as a metal utility access cover), the breaker bars relieve by moving backward to allow the foreign material to pass through the unit.

As with the horizontal impactor, the hammermill crushers are typically used as a primary and secondary unit by recirculating the oversize back through the crusher. However, a hammermill can be installed as a secondary crusher behind a large jaw crusher, just like horizontal crushers.

Jaw/Roll Combination

The combination jaw/roll crusher is readily available on the used equipment market and has proven effective for downsizing slabs of RAP material (Figure 5). The jaw takes the slab down to a more manageable size, which is then reduced to usable size by a secondary roll crusher. Typically, these combination crushers have recirculating conveyors to recycle the oversized material back to the roll crusher until it is properly sized.

Both jaw and roll crushers can "pancake" the RAP, especially on warm, humid days. "Pancaking" is a commonplace phrase among producers to describe RAP sticking together or agglomerating in the crusher, forming a flat, dense mass of RAP material between the crusher surfaces. This can slow production, as the crusher must be stopped, and the "pancaked" RAP material removed to continue crushing. While this proves aggravating for the processor, it does not affect the quality of the processed product. Horizontal impactors and hammermills are not plagued with this problem.

Typically, jaw/roll crushers are used in conjunction with a double deck screen for producing two products from full-depth RAP: a fine product (typically a 1/2 inch minus), and a coarse product (typically a 1/2 inch to 3/4 inch).

Field experience has shown that a remarkably consistent RAP product (stone gradation, asphalt content, and asphalt characteristics) can be achieved through careful blending and crushing operations. The key to producing a homogenous RAP product from a "composite" pile is to first blend the RAP

FIGURE 5
Jaw/Roll Crusher Combination

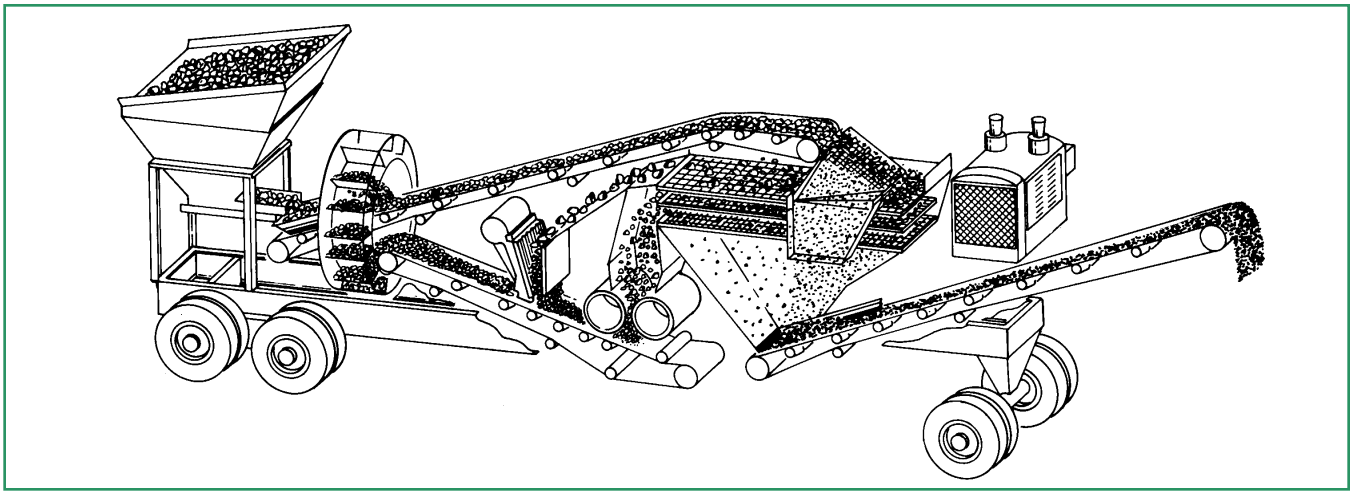

Cedarapids

thoroughly with a front-end loader or bulldozer and then to down-size the top stone size in the RAP in the crushing operation to one smaller than the top-size in the hot mix being produced (e.g., 5/8 inch for a 3/4 inch top-size mix). This ensures that the asphalt-aggregate bond is broken as much as possible and no oversize stone appears in the mix. The actual crushing and testing of a given tonnage will generally prove this situation to be true. This crushing efficiency is refreshing news for those interested in conserving landfill space, and increasing the percentages of full-depth RAP materials that come from several sources.

When a crusher is available at the processing site at all times, smaller quantities are typically crushed, sampled for consistency, and then used by the facility. Crushing smaller quantities provides several advantages to the producer. First, it makes it easier to sample the crushed product for consistency and keep the crushed product identified. Second, smaller piles can be used quickly before they have a chance to gain moisture from being stored outside, which increases drying costs and limits RAP percentages that can be used in the facility.

Milling/Grinding Reduction Units

Another type of crushing equipment that is infrequently found is best described as a "Milling/Grinding Reduction Unit." These units have milling machine-type heads installed in the discharge area

FIGURE 6
RAP Stockpile

Jim Warren

of a bin, and large slabs of RAP are deposited in the bin for size reduction into material that can be used directly in the facility. These units are not crushers and are not designed to reduce the stone size in the RAP. They are designed only to break the asphalt-aggregate bond, much like a cold planing or milling machine does. While not in prevalent use, four or five different manufacturers produce Milling/Grinding reduction units of various designs.

Stockpiling RAP that Is Ready for Processing

When recycling first began in the late 1970s, the literature of the day suggested stockpiling RAP in low, horizontal stockpiles for fear that high, conical stockpiles would cause RAP to reagglomerate with the weight of the pile. Experience has proven, however, that this is not the case, and indeed, large, conical stockpiles are preferred (Figure 6).

Practical experience has shown that RAP does not have a tendency to reagglomerate or recompact in large piles. What is peculiar, is that RAP has a tendency to form a crust over the first 8-10 inch of pile depth. This crust tends to help shed water, is easily broken by a front-end loader, and may even help keep the rest of the pile from compacting. Front-end loader operators report that after breaking through this protective covering, each additional load from the inside of the stockpile is easy to manage, and that the RAP moves without difficulty through the feeding equipment on the facility.

Speculation is that the "crust" on the RAP pile forms due to a solar/thermal effect from the sun, causing the RAP to gain just enough heat on the surface to partially "melt" back together. Some processors have even experimented with the idea of paving over the stockpile with fresh hot mix (by hand, of course) in an attempt to seal the stockpile rather than rely on this effect to occur naturally with the sun. Because of the above mentioned issues, radial stackers can be used when stockpiling large quantities of RAP.

Horizontal stockpiles also have a tendency to form this 8-10 inch crust. Yet, because the stockpile is smaller and lower to the ground, it can be aggravating for the front-end loader operator to work with the pile. With each bucket load, more crust is encountered. This crust needs to be scalped off, or downsized with a RAP breaker, prior to processing in a hot mix facility. If a large percentage of each bucket load contains crust, then the material handling equipment in the facility is also taxed, and production of RAP mixes can be slowed.

Also, RAP has a tendency to hold water and not drain over time like an aggregate stockpile. Therefore, low, horizontal, flat stockpiles are subject to larger moisture accumulation than tall, conical stockpiles. It is not unusual to find RAP moisture content in the 7-8% range during the Spring at facilities using low, horizontal stockpiling techniques. This drastically affects RAP percentages that can be processed in the facility, raises fuel costs, and limits overall production rates.

Material handling machinery, such as front-end loaders and bulldozers, should be kept from driving directly on the stockpile. Compaction will result, making it very difficult for the loader to handle the RAP. With large stockpiles, and restricted space, this sometimes cannot be avoided. In those circumstances, bulldozers must be used later to "shave" the stockpile, removing material a little at a time, and the front-end loader can then be used to carry the material to a crusher for processing.

Feeding RAP Cold Feed Bins

While conventional style cold feed bins can feed RAP materials, RAP cold feed bin designs have evolved to generally include steeper side walls, longer feeder belts, longer openings onto the belts, and in some cases, inclined feeder belts or open end walls; all in an effort to promote as free a flow of RAP product as possible (Figure 7).

RAP material requires special handling by the front-end loader operator and cannot be handled in

FIGURE 7
RAP Cold Feed Bin

FIGURE 8
RAP Shed

the same manner that aggregate materials are handled when charging cold feed bins.

RAP should be "dribbled" into the RAP cold feed bin by tipping the front-end loader bucket a little at a time, charging the bin slowly. An entire bucket of RAP deposited into the bin at one time, and with force, can cause the RAP material to pack as it drops en masse into the bin—particularly on hot, humid days or with particularly wet RAP.

It is also best not to heap RAP into the bin filling it to capacity. RAP is not free flowing like an aggregate material. RAP is more likely to "rat hole" or "bridge" than virgin aggregate materials. The loader operator, consequently, will need to feed the RAP bin more frequently than a virgin aggregate bin.

Also, RAP should not be left in the bin for extended periods of time—especially on hot, humid days. RAP can recompact in the bin with its own weight under these circumstances. If the HMA facility is going to be shut down for periods longer than an hour or two, the operator should consider clearing the bin to avoid any difficulties on start-up.

Vibrators should be avoided with RAP material to counteract "bridging" and other feed problems. They generally have a tendency to pack the RAP together rather than solving the feed problem. Pneumatic "air cannons" or "blasters" which send a charge of compressed air into the material under pressure are the most effective equipment for dislodging RAP material that is not feeding properly.

Covering Stockpiles

RAP does not shed water or drain like a typical aggregate, and high percentages of moisture in RAP have dramatic effects on the percentage of RAP that can be processed at a facility. Therefore, covering RAP stockpiles is even more economical than covering virgin aggregate stockpiles.

RAP should never be covered with a tarp or plastic, however. In humid climates, which are the climates where covering RAP stockpiles proves logical, cover-ing stockpiles causes condensation under the tarp and adds moisture to the RAP stockpile. While this moisture may be less than allowing precipitation to fall directly on the RAP stockpile, it still has a det-rimental effect on the moisture content in the stock-pile and should be avoided.

For this reason, most RAP stockpiles are either left uncovered, or RAP is stored under the roof of an open-sided building (Figure 8). In such a structure, free air can pass over the RAP, yet the RAP is protected from direct falling precipitation. Such structures are relatively economical, and with enough RAP production, can be justified on reduced fuel consumption and the possible savings from using higher RAP percentages in the facility.

Many producers pave under RAP stockpiles with the hope that this both contributes to drainage from the RAP pile and reduces possible moisture absorption from the ground. An added benefit to paving under a RAP stockpile is that possible contamin-

ation is eliminated as the front-end loader collects material close to the grade on which the stockpile is resting.It is important that the pavement be sloped properly to provide positive drainage.

Segregating Stockpiles

The key to producing a quality recycled pavement is in knowing what stone and asphalt properties exist in the reclaimed pavement. When large quantities of RAP from different sources are available, it is advisable to keep stockpiles separated and identified by source.

Throughout the late 1970s and early 1980s, great effort was put forth on keeping each and every stockpile of RAP segregated for processing at a later date. Space constraints and small quantities of RAP from some sources forced processing sites to create a "composite" or "blended" pile to be dealt with at a later date. From dealing with these stockpiles, operators discovered that consistent RAP products could be produced using a crushing and screening operation and reprocessing stockpiles which had come to the yard from different sources. This discovery has taken some of the emphasis away from separated stockpiles. Whenever significant amounts of an identical or similar RAP product are available, however, it is only logical to attempt to keep these materials separated from other RAP products.

RAP Mix Designs

A detailed explanation of RAP mix design is beyond the scope of this publication. However, a RAP mix design, just like any other mix design, should be carefully developed, taking into account the job specifications, available materials, and economics.

Proper testing starts with representative sampling of the stockpiles of RAP—it can't be emphasized strongly enough that proper sampling techniques be used to secure RAP samples for analysis.

Normally, the aggregate gradation and asphalt cement content is determined from a number of RAP samples taken during the mix design stage. The reclaimed aggregate is treated like an additional aggregate, and the mix is adjusted for the percentage of asphalt cement contained in the RAP. In addition, the characteristics of the recovered asphalt cement are measured for use in the mix design process.

At present, there is no clear consensus in the industry on how to account for the recovered asphalt cement in the RAP. The main question is: *At what percentage of RAP should a change in new asphalt grade be specified?* Current discussion ranges between 10 and 20%. Below that cutoff point, it is thought that the contribution of asphalt cement by the RAP is too small to make a difference, and to use the same grade of asphalt cement one normally would use. The only difference would be to adjust the new as-phalt content based on the percentage of asphalt cement in the RAP. Above this arbitrary cutoff point, it is recommended to change the new asphalt cement a maximum of one grade (e.g., AC-20 to AC-10) and account for the percentage of asphalt cement in the RAP. (NOTE: Different criteria may apply to Superpave performance-graded asphalt binders.)

For more detailed information, the reader is encouraged to obtain and read the Asphalt Institute's publication, *Mix Design Methods* (MS-2), which includes a section on RAP mix design. This publication includes several design examples which lead the reader through a step-by-step procedure for developing a RAP mix design.

Once the mix is developed in the laboratory, it should be monitored with an established quality control procedure to ensure the final mix meets specifications.

Processing RAP in a Hot Mix Facility

As shown in Figure 9, two different types of heat transfer techniques are primarily involved in processing RAP in hot mix facilities: conductive heat transfer and convective heat transfer.

Conductive heat transfer occurs when two objects of different temperature touch one another. This type of heat transfer technique is used in almost all batch facility applications, and when RAP is introduced in counterflow dryers, such as counterflow drum mixers.

Convective heat transfer occurs when solid particles are exposed to a hot gas stream. Conventional aggregate dryers use convective heat transfer to heat and dry aggregates for a batch facility. Traditional parallel-flow drum mixers primarily use convective heat transfer techniques when drying RAP.

Since recycling began in the late 1970s, several approaches have been developed and are in use for drying and heating RAP in hot mix facilities. Early

in the evolution of this process, the industry's primary concern was whether RAP could be processed practically, and whether the resulting hot mix product quality was sufficient to be used as structural pavement. Once that was established, the industry shifted its concern to the environmental process of RAP in these facilities. Different approaches exhibited different levels of hydrocarbon and dust

FIGURE 9
Conductive Versus Convective Heat Transfer

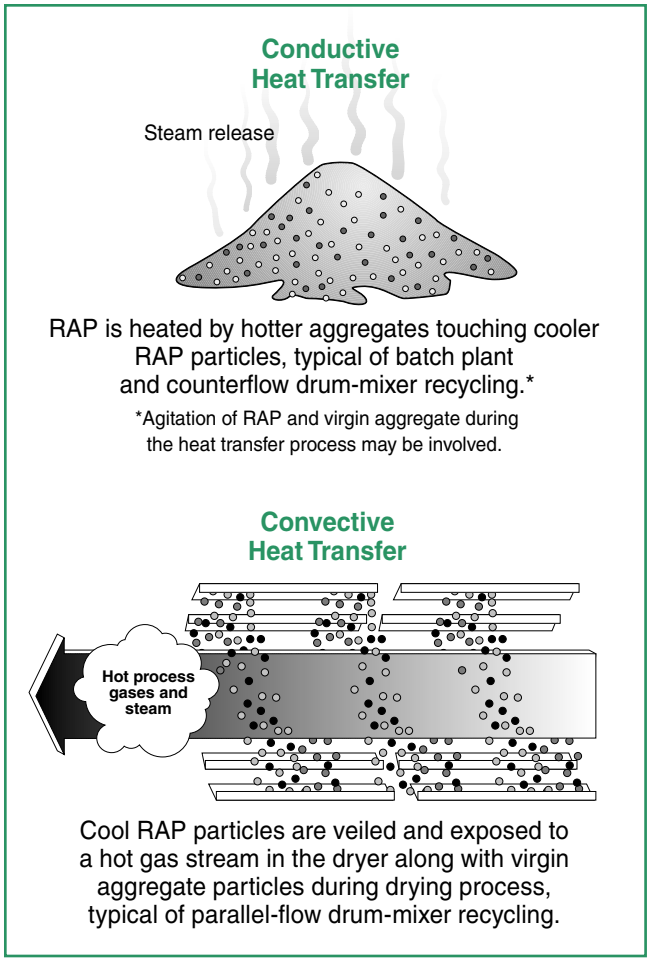

emissions. The concern over limiting the amount of hydrocarbon vapors, or "blue smoke" as it is commonly called, led to the development of new drying and processing technologies, such as the counterflow drum mixer, in an effort to process high percentages of RAP without negative impact on the emissions from a hot mix facility.

The following discussion of different types of facility configurations will address emission considerations in addition to explaining the heat transfer approach used with these different techniques.

FIGURE 10
Weigh Bucket Recycling Technique

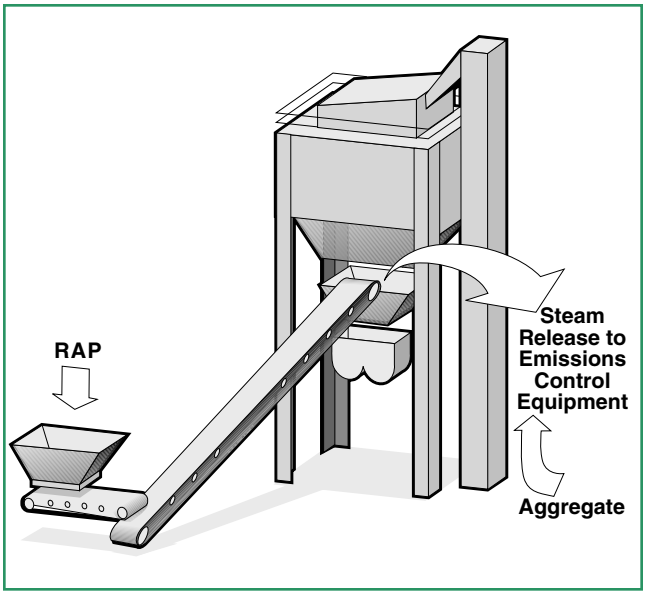

Weigh Bucket Recycling Technique

It is appropriate to begin this review with batch facilities, and the process generally referred to as the "Weigh Bucket" Batch Facility Technique, as this was the first approach used to make high-quality, state-approved mixes on a public project. Earlier literature refers to this approach as the "Minnesota Method" because the first project was completed in Maplewood, Minnesota, for the Minnesota Department of Transportation. This project proved that high-quality mixes could be manufactured using Reclaimed Asphalt Pavement materials.

With the "weigh bucket" method of recycling in a batch facility, cold, wet RAP is added to the weigh hopper where the batch controls weigh RAP as an additional material (Figure 10). The RAP is mixed with super-heated virgin materials, and conductive heat transfer occurs in the weighbox and the pugmill throughout the dry-mix cycle.

Table 1, first published in NAPA's IS-71, *Hot Recycling in Hot Mix Batch Plants*, shows the required temperatures of virgin aggregate, based on different moisture levels in the RAP, the percentage of RAP desired in the final mix, and the final product temperature required. The shaded areas note excessively high aggregate temperatures, which are required for high RAP and moisture contents but are not realistically achievable.

During the heat transfer process, a significant amount of steam is released from the cold, wet

TABLE 1
Required Aggregate Temperature

Reclaimed Material Moisture Content Percent	Recycled Mix Discharge Temperature, ˚F			
	220˚F	240˚F	260˚F	280˚F
A. Ratio: 10% RAP/90% Aggregate				
0	250	280	305	325
1	260	290	310	335
2	270	295	315	340
3	280	300	325	345
4	285	305	330	350
5	290	315	335	360
B. Ratio: 20% RAP/80% Aggregate				
0	280	310	335	360
1	295	320	350	375
3	310	335	360	385
3	325	350	375	400
4	340	365	390	415
5	355	380	405	430
C. Ratio: 30% RAP/70% Aggregate				
0	315	345	375	405
1	335	365	395	425
3	360	390	420	450
3	385	415	445	475
4	410	440	470	500
5	435	465	495	525
D. Ratio: 40% RAP/60% Aggregate				
0	355	390	425	460
1	390	425	460	495
2	425	460	495	530
3	470	500	535	570
4	500	535	570	610
5	545	575	610	645
E. Ratio: 50% RAP/50% Aggregate				
0	410	455	495	540
1	465	515	550	590
2	520	560	605	650
3	575	620	660	705
4	640	680	715	760
5	690	735	775	820

NOTE: 20˚F loss between dryer and pugmill assumed in these calculations.

Reproduced from NAPA publication, *Hot Recycling in Hot Mix Batch Plants* (IS-71), page 2.

RAP. Table 2 shows the amount of steam generated, in cubic feet per minute, with this heat transfer approach.

The amount of steam generated is significant. The pugmill and weighbox area must be enclosed and vented to the air pollution control system to accommodate this large volume of steam, and the dust that it invariably carries from the dry, dusty aggregate.

Typical venting systems allow for a shrouded weighbox/mixer area with large ductwork from this area to the primary collector in the exhaust system. Without damping this duct closed, a large volume of air is pulled from the weighbox/mixer area at all times. This reduces the air volume in the dryer, and consequently, the production capacity

TABLE 2
Rate of Water Vapor Released from Pugmill (cubic feet per minute)

Pounds of RAP Per Batch	% Moisture in RAP 1	2	3	4	5
1000	1,600	3,300	5,000	6,700	8,500
2000	3,200	6,600	9,900	13,400	16,900
3000	4,900	9,800	14,900	20,100	25,400
4000	6,500	13,100	19,900	26,800	33,900
5000	8,100	16,400	24,900	33,500	42,300
6000	9,700	19,700	29,800	40,200	50,800

NOTE: Water vapor release time is assumed to be 10 seconds.

Reproduced from NAPA publication, *Hot Recycling in Hot Mix Batch Plants* (IS-71), page 4.

of the dryer—just as overdrafting the fugitive dust system affects production of a batch facility. (Refer to NAPA pub-lications IS-52, *The Fundamentals of the Operation and Maintenance of the Exhaust Gas System in a Hot Mix Asphalt Facility*; and IS-73, *Fugitive Dust Control and the Hot Mix Plant,* for additional information on this subject.)

A typical damping system involves a large, single-bladed, butterfly-style damper, opened and closed by an electrically operated air cylinder. Relays in the control panel open the damper as RAP is being introduced into the weighbox. Timers hold the damper open throughout the heat transfer cycle and can be adjusted by the operator for optimum results.

Oversized exhaust fans may be installed on the batch facility to compensate for the air loss to the dryer during the RAP batching and heat transfer cy-

cle. With a larger exhaust fan, the aggregate dryer can be used at capacity for drying and superheating aggregate, with the larger fan capacity being saved for the additional flow required to draft the tower during the RAP batch and heat transfer cycle.

Without changing the exhaust fan, the dryer must be operated at reduced aggregate throughput, and "over drafted" in such a fashion that fan capacity used to evacuate the steam from the batch tower during the RAP batching cycle reduces gas volume in the dryer by removing the "over drafted" excess air volume, but does not remove the air volume re-quired to dry and superheat the aggregate at the reduced rates.

For example, if an exhaust fan on a batch facility is capable of providing 220 tons per hour (tph) through an 8-foot diameter dryer, and is properly sized but not oversized for that facility, then this facility should be operated so that no more than 220 tph is expected in total production. Depending on the excess volume available from this fan, the throughput should be slightly less because slightly more gas volume is re-quired to dry and superheat aggregate than to just dry and heat aggregates to paving temperatures.

While recycled mixes can theoretically be produced up to 50% in batch facilities, in day-to-day practical field conditions, it is rare to see RAP percentages higher than 25-30% with the mixer heat transfer method. This is because RAP moistures typically run in the 3-5% range, and elevating aggregate temperatures beyond 600°F is difficult due to flighting and dryer efficiencies. Dryer exit gas temperatures, as previously discussed, also can impose a practical limit because the filter fabric typically used in baghouse collectors is limited to 400°F continuous service temperatures, and fan capacity (gas volume) may be reduced at higher temperatures based on the specific fan design.

Pugmill Recycling Technique Using Separate RAP Weigh Hopper

By adding an additional weigh hopper to the batch facility, batch cycle time is reduced by weighing RAP independently and in conjunction with the asphalt and aggregates.

The same heat transfer, steam release, and practical limits apply to this approach as with the above techniques. The advantage, of course, is that during long production runs of recycled pavement, an increase in production rate per hour can be achieved with the slightly shorter batch cycle time (Figure 11).

Typically, a high-speed slinger conveyor is used to convey the RAP from the weigh hopper to the pugmill, although a chute or high-speed screw conveyor can also be used.

FIGURE 11
RAP Into Pugmill

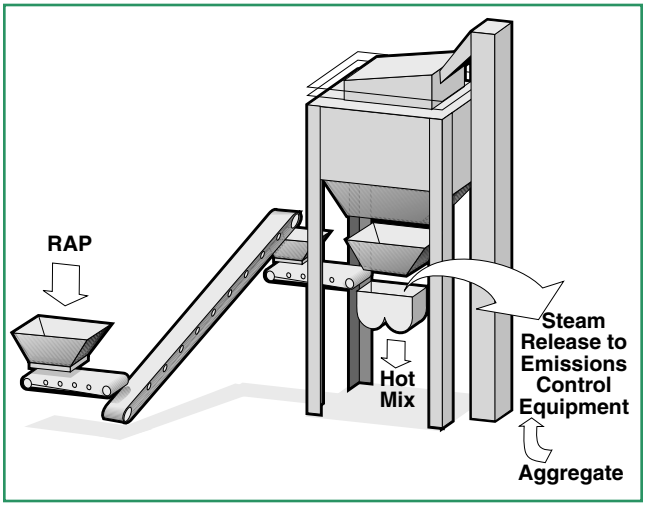

Bucket Elevator Recycling Technique

Another approach to batch facility recycling is gaining acceptance due to its simplicity, and elimin-ation of the steam "explosion" typical of the mixer heat transfer method. With the "Bucket Elevator" recycling method, cold, wet RAP is mixed with the superheated virgin aggregate as the aggregate exits the dryer and enters the bucket elevator (Figure 12).

The steam release that results from conductive heat transfer occurs on a continuous basis in the buckets as the virgin aggregate/RAP mixture makes its way to the screen deck. The steam that is released from the RAP is carried away on a continuous basis by the fugitive ductwork already fitted to the bucket elevator.

Because the RAP is blended with the virgin aggregate on a continual basis, it is typical to see belt scales installed on both the belt conveyor feeding virgin aggregate into the dryer, and the belt conveyor feeding RAP into the bucket elevator to ensure the proper ratio of RAP to virgin aggregate.

Gradation control for mix production is done one of two ways, and differently than in a typical batch facility producing only virgin mixes. With the first method, the RAP and virgin aggregate are both screened together over the screen deck, and

FIGURE 12
RAP with Bucket Elevator

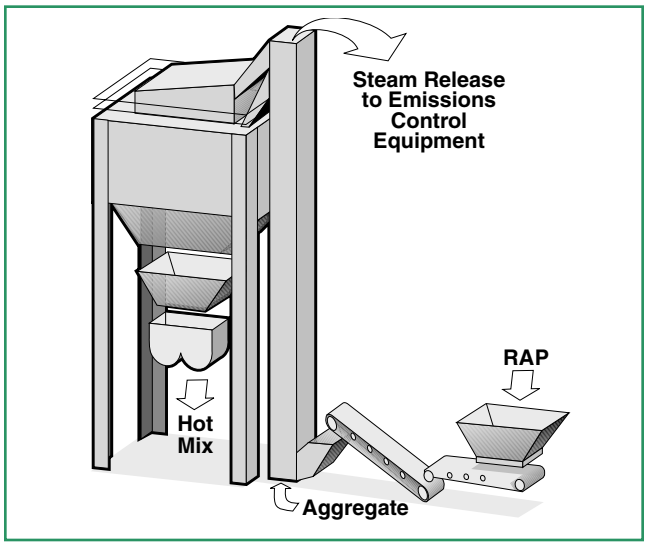

the composite mixture is separated into the different hot bins in the tower. Each hot bin is sampled for asphalt content and gradation. Extractions must be done to determine the asphalt content in each hot bin. Gra-dations on the hot bin sample must then be conduct-ed, and individual hot bin percentages are then calculated based on the recovered gradations from each supply bin. The asphalt content reclaimed from the RAP is then calculated based on the extraction results, and the new liquid asphalt requirement for each batch is established.

Note that an assumption must be made that the RAP is consistent not only with recovered stone gradation and asphalt content (as with any recycling approach), but also in RAP particle size. Because this approach to mix design and field verification is more difficult than with weighbox injection methods, screen bypass approaches are frequently applied.

With a screen bypass method, gradation is controlled at the cold feed bins feeding the dryer, as with drum mix and other continuous-flow facility technologies, and the virgin aggregate/RAP blend is stored in a single bin in the tower, and then weighed as a combined mixture into the aggregate weigh hopper. Many states allow this approach, but typical-ly require belt feeders with variable speed drives and speed displays with total and proportional control over each feed bin.

Because the trip up the elevator takes relatively little time, and because the RAP must be dry before it passes over the screens or is stored in the combined RAP/aggregate bin, RAP percentages rarely run over 20% with this approach. RAP must be dry when using this approach because RAP that is not dried before it passes over the screen cloth will cause screen blinding. The same heat transfer tables apply as with other heat transfer methods.

Bucket Elevator Recycling Technique Introducing RAP Into Heat Transfer Chamber on Dryer

This approach is essentially the same as the standard "bucket elevator" method, but the addition of a heat transfer chamber on the aggregate dryer allows the RAP heat transfer to begin in the dryer shell, and higher percentages of RAP can be used (Figure 13). All other aspects of the standard "bucket elevator" method apply with this recycling approach.

FIGURE 13
RAP into Dryer with Bucket Elevator

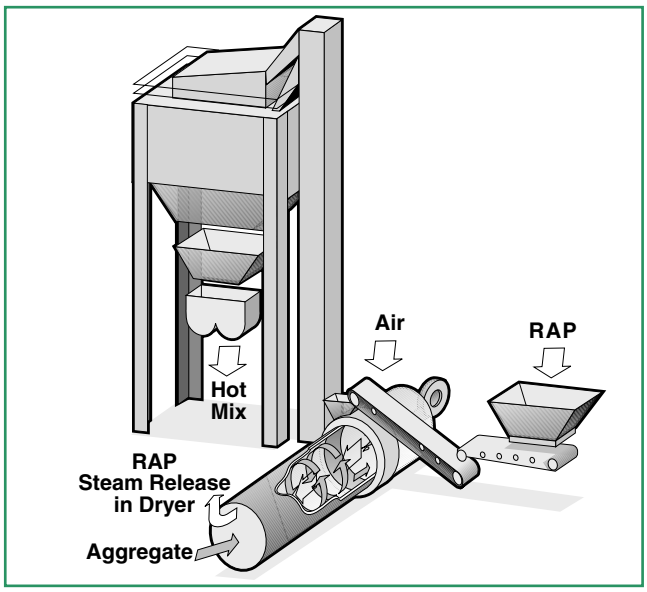

RAP Dryer Recycling Technique

An approach widely used in Western Europe incorporates a separate convective heat transfer dryer for the RAP, which results in higher percentages than those mentioned above (Figure 14). Recycled mixes with 50% RAP content are typical.

Heated RAP materials are then conveyed to a separate, heated storage bin which has its own weigh hopper similar to an aggregate weigh hopper on a typical batching tower. RAP materials are weighed as a separate ingredient, then conveyed to the pug-mill for production of a recycled mix formula. Typi-cally, a high-speed screw conveyor is used for this conveyance, but a chute or belt conveyor can also be used.

The dryer is typically a parallel-flow design, and the gasses, which contain steam and hydrocarbons from the convective heat transfer of the RAP, are exhausted to the primary aggregate dryer where hydrocarbons are destroyed in the combustion area of that dryer. The percentages of RAP possible are primarily limited by the capability of the burner on the virgin aggregate dryer to accept the steam and hydrocarbon-laden gasses of the RAP dryer. Unlike the other batch facility recycling approaches, flexibility between recycled mixes and virgin aggregate mixes is easily maintained because superheated virgin aggregates are not stored in the batching tower hot bins.

FIGURE 14
RAP Dryer System

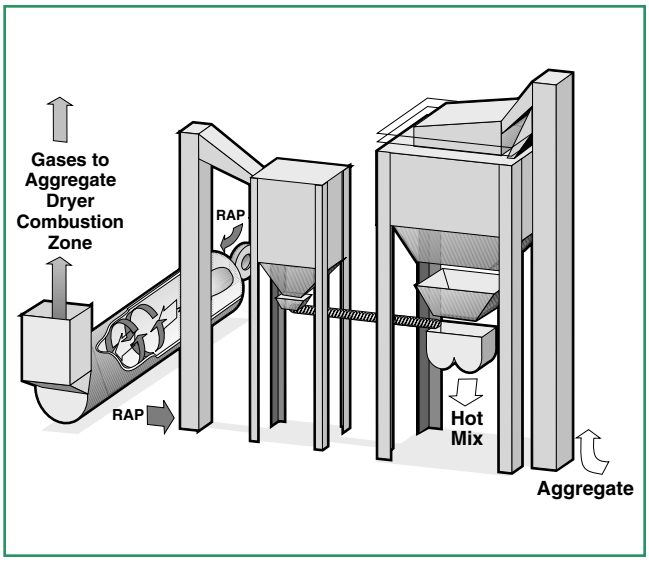

Traditional Parallel-Flow Drum Mixer

Drum mixers became popular in the early to mid 1970s as a simple, but effective way of making hot mix on a continuous basis. Aggregate is dried and heated convectively with the aggregate being fed in the end with the burner, and the exhaust gasses travelling through the dryer in the same direction as the aggregate—hence the term "parallel flow." The liquid asphalt is introduced in the cooler, discharge end of the dryer (Figure 15).

Manufacturers estimate that approximately 1500 parallel-flow drum mixers were built for use between 1972 and 1992. Several types of recycling approaches are used with this type of continuous plant design, but by far the most popular approach was the mid-drum entry approach where RAP is introduced into the dryer approximately in the middle for heating and mixing with the virgin aggregates. The mid-entry design is used to keep the high temperatures in the combustion and drying end of the dryer from damaging the hydrocarbons in the RAP.

RAP is primarily heated convectively in a parallel-flow drum mixer, and hydrocarbon constituents could be found in the gas stream in various quantities, depending on the moisture in the RAP, the moisture in the virgin aggregate, the characteristics of the asphalt cement in the RAP, the characteristics of the new liquid asphalt cement, the gradation of the RAP, and the final mix temperature desired.

From a heat transfer standpoint, high percentages of RAP can be used with this approach. Demonstration projects have been successfully completed

FIGURE 15
RAP in a Parallel-Flow Drum Mixer

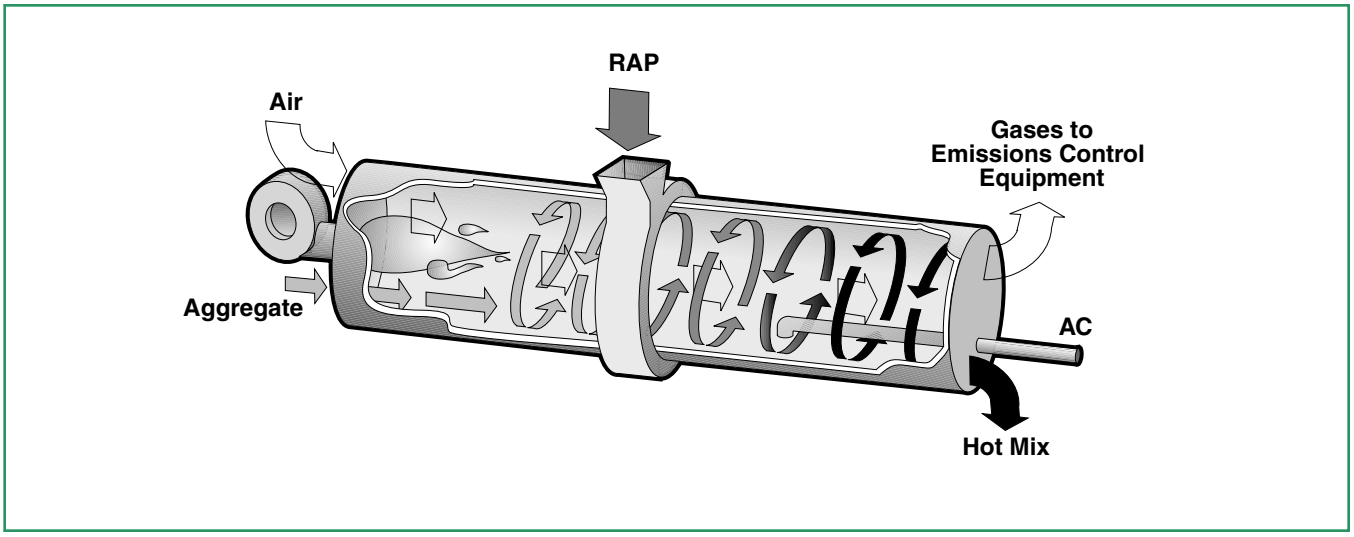

with RAP percentages as high as 70%. Gaseous emissions as a general rule, however, are typically un-desirable with RAP percentages higher than 50%, and undesirable at even lower percentages in some circumstances.

From a historical perspective, it is important to note that this type of plant design permits the federal government, the states, and private contractors to experiment with recycled mixes of high percentages and prove that quality pavements can be constructed with high RAP percentages.

As gaseous emission targets became more restric-tive, it became necessary to limit the amount of RAP used, or to limit the final mix temperature desired to stay within acceptable gaseous emission and visible opacity limits. Those restrictions vary from job to job and situation to situation.

Many of these facilities are still in use throughout the industry. The advantages of higher RAP utiliza-tion (above 25%), brought new equipment innova-tions for high RAP percentages without gaseous emission concerns. Each of the following facility designs can be found throughout the industry. They are available on the used and new equipment market, and recycled mixes can be effectively produced from them.

Parallel-Flow Dryer with RAP Collar and Continuous Mixing Device

Because much of the hydrocarbon content in the process gas stream can come from new liquid asphalt cement (which frequently has a higher penetration, or lower viscosity, which typically correlates to a lower temperature where vapors are released), a continuous mixing device can be added to a parallel-flow dryer to introduce the new liquid asphalt cement (Figure 16). A rotating mixing drum or a continuous pugmill can be used as the external mixing device. This isolates the new liquid asphalt from the process gas stream and reduces the hydrocarbon content in the process gasses.

Typically, a primary collector is added to the air pollution control equipment because the dust particles in the air stream cannot be captured with the veiling hot mix product as in a parallel-flow drum mixer. The fines collected in the primary collector are typically returned immediately to the mixing area.

Hydrocarbon constituents can still be present in the process gas stream, however, because heat transfer for the RAP is still handled convectively. However, this level will vary depending on several variables: percentage of RAP, gradation of RAP, surface moisture of the materials being dried, length of dryer, type of burner, style of flighting, etc.

FIGURE 16
RAP in a Parallel-Flow Dryer and Continuous Mixer

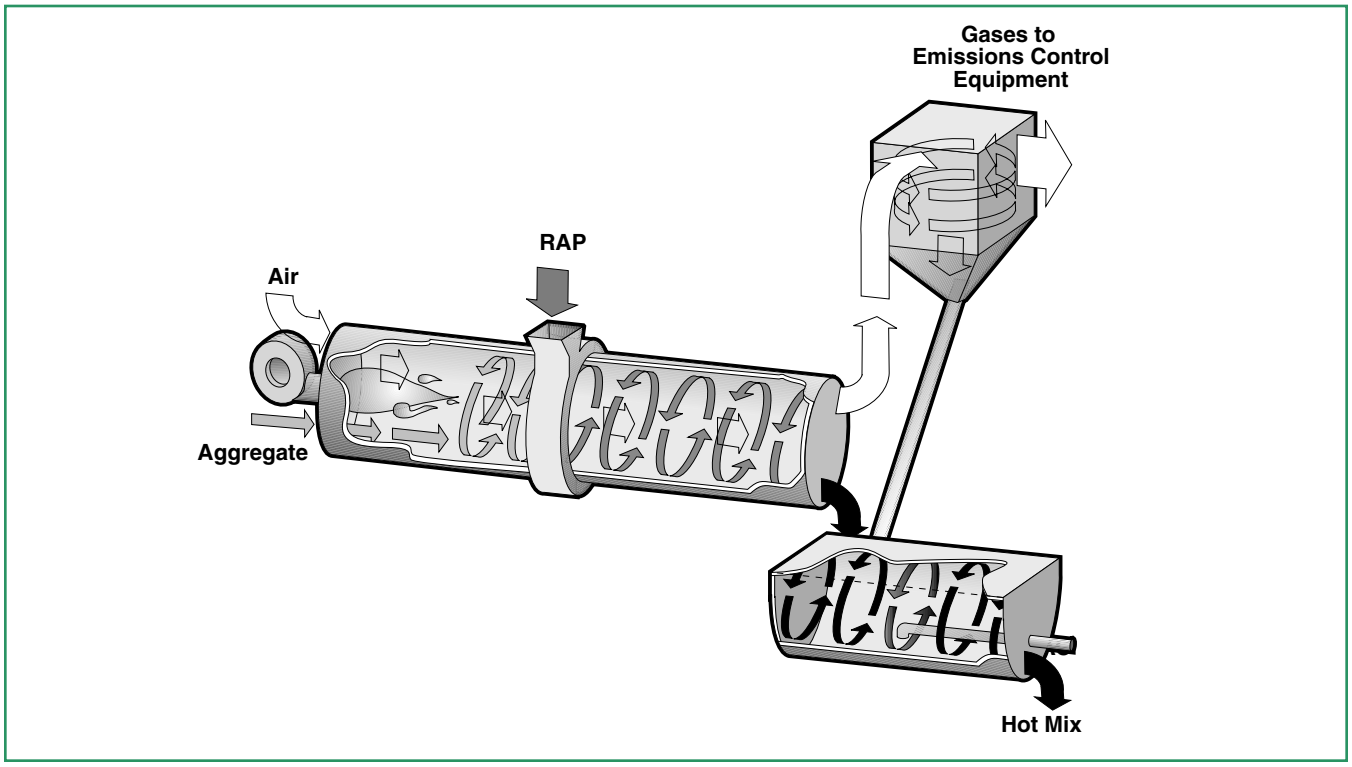

Parallel-Flow Drum Mixer with RAP Collar and Isolated Mixing Area

A parallel-flow drum mixer with an isolated mixing area accomplishes the same benefits as a dryer with separate mixer, but the mixing device is essentially an integral part of the dryer and is welded to the dryer shell so that it rotates with the dryer (Figure 17). The gas stream is removed from the dryer prior to the aggregate/RAP mixture entering the mixing area. Some designs vent the mixing area back to the combustion area of the dryer.

Some hydrocarbon constituents are still present in the gas stream because the heat transfer for the RAP is still primarily convective (being heated by the hot gas-

FIGURE 17
RAP in a Parallel-Flow Drum with Isolated Mixing Area

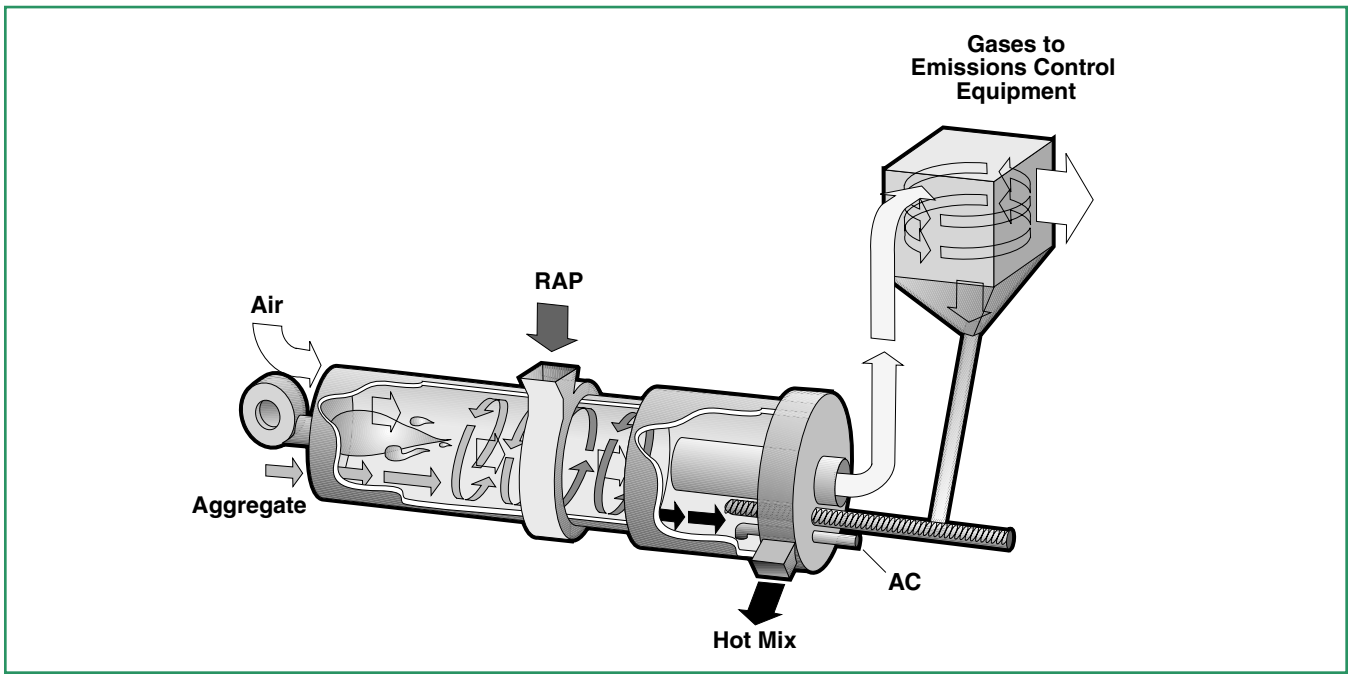

FIGURE 18
RAP in a Drum Mixer with Counter-Flow Drying Tube

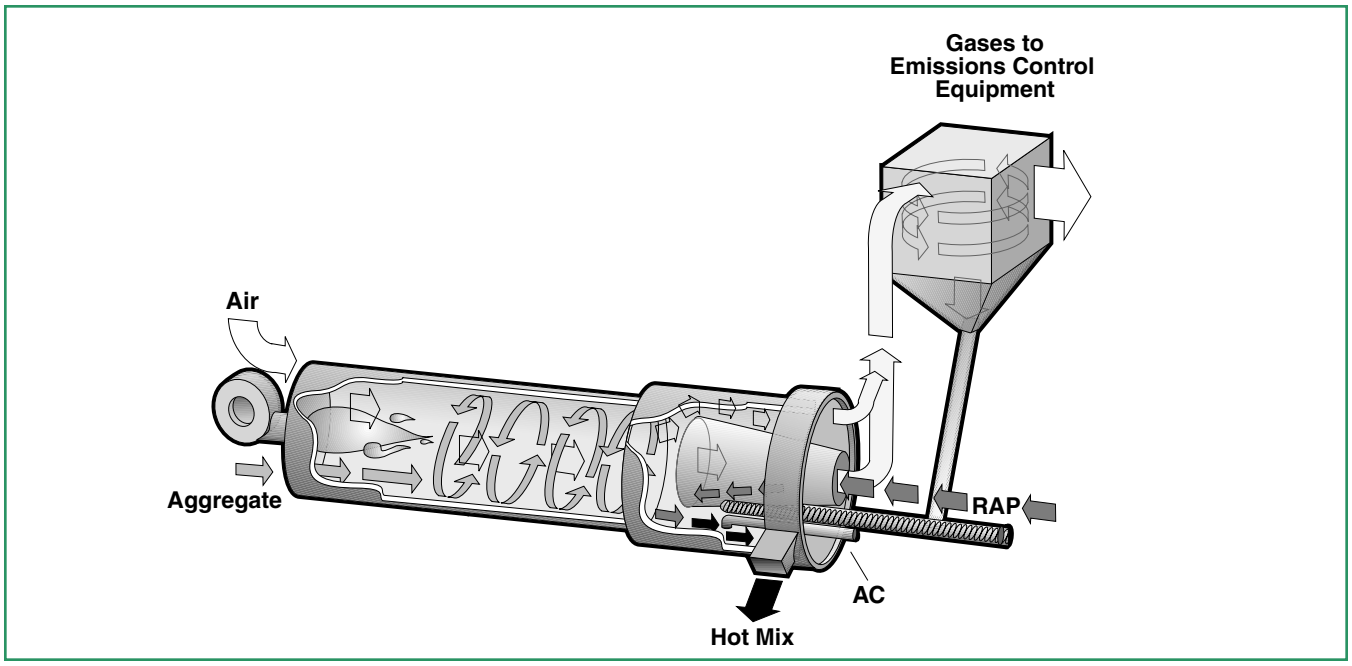

ses). Again, the amount of hydrocarbons present in the gas stream varies according to several variables.

This equipment approach, as with the other approaches listed below, requires a primary collector for capture of the larger dust particles. The particles collected are typically returned to the mixing area of the dryer with a screw conveyor.

Parallel-Flow Drum Mixer with Counter-Flow RAP Drying Tube

An adaptation of the previous design allows the RAP to be introduced into a cooler portion of the dryer and travel against (counterflow) the gas stream to mix with the virgin aggregates in the area where the aggregate/RAP mixture enters the mixing area of the dryer (Figure 18).

Hydrocarbon levels are drastically reduced from the gas stream because the new liquid AC is shielded from direct exposure to the gas stream, and the aggregate is superheated for some conductive heat transfer to the RAP while the convective heat transfer of the RAP occurs in a cooler portion of the dryer.

Parallel-Flow Dryer with RAP Introduced in Continuous Mixing Device

RAP can be introduced into a separate mixing device so that all hydrocarbons, except for the burner fuel, can be kept from the process gas stream. The parallel-flow dryer is used to superheat the virgin aggregate (Figure 19). RAP is heated conductively in the continuous mixing device.

RAP percentages are affected by the physical space available for conductive heat transfer in the mixing device. The superheated virgin aggregates must heat the RAP, and time and space are required for the moisture to be released from the RAP.

Steam that is released from the RAP can have hydrocarbon constituents. A popular approach to address this issue is to direct this vapor and steam back into the combustion area of the aggregate dryer which effectively burns any hydrocarbon constituent left in that separate gas stream.

The percentage of RAP that can be achieved with this approach can also be limited by the air pollution control equipment on the facility. Because the

FIGURE 19
Parallel-Flow Dryer with RAP Added in Continuous Mixer

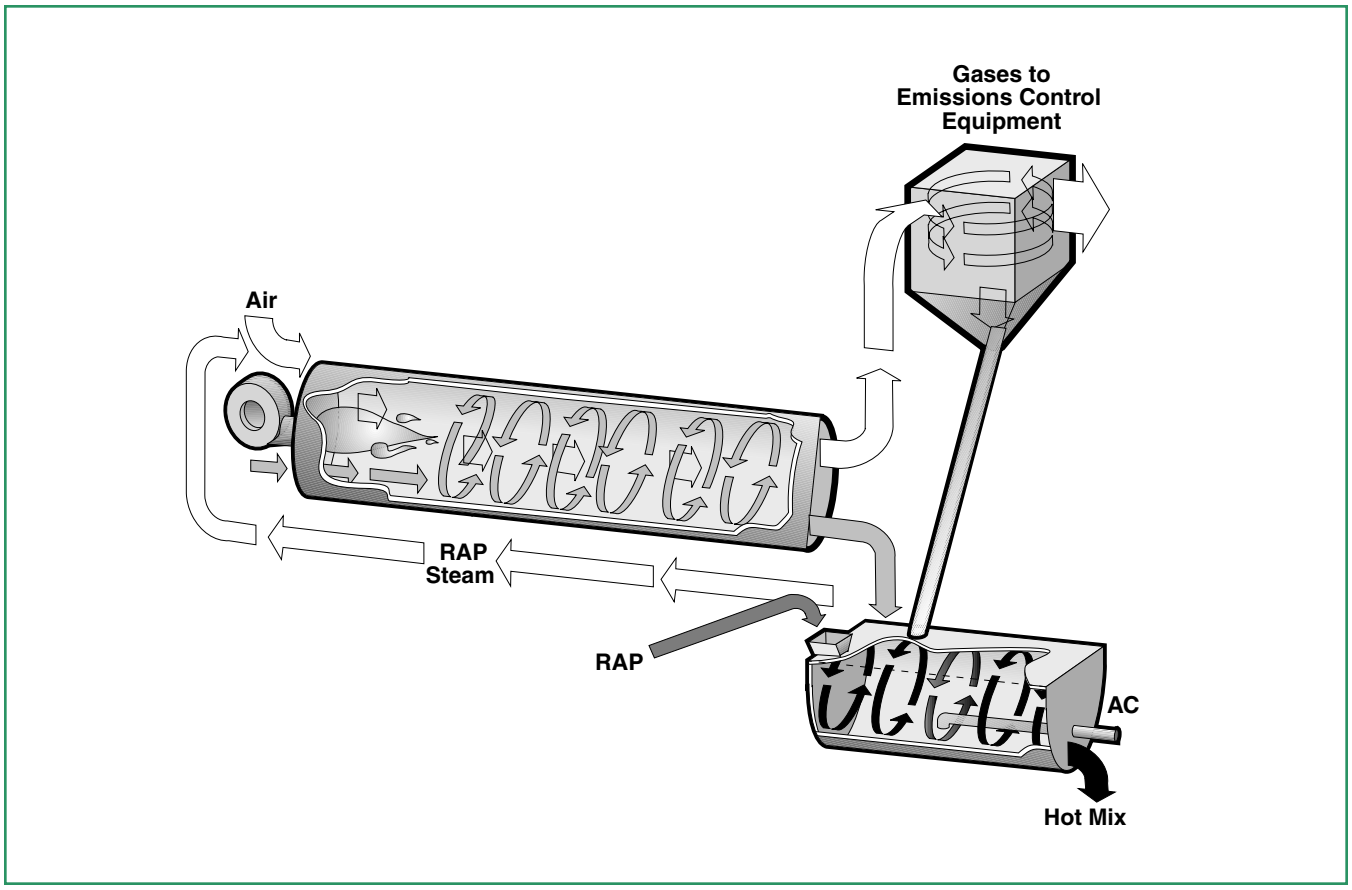

virgin aggregates are superheated in a parallel-flow configuration, the exhaust gas temperature will not be lower than the aggregate temperature. (To see the temperatures required in conductive heat transfer, refer to Table 1 presented earlier.) If the facility has a baghouse fabric filter collector, temperatures above 400°F are likely to damage the filter media. Therefore, fugitive air must be brought in to cool the collector during operation. A larger exhaust fan can be installed on the facility to compensate for the loss of air available to the dryer. Without the larger fan, reduced throughput will result.

Lower RAP percentages, of course, do not require these modifications because as can be seen from Table 1, lower RAP percentages require lower virgin aggregate and gas stream temperatures.

Also, facilities equipped with wet-scrubber collectors do not typically require these modifications. Elevated temperatures on wet-collector systems can reduce air flow through the system, however, depending on the exhaust fan's capabilities at higher temperatures. This can affect production rates, depending on the excess air capacity of the fan.

Counter-Flow Dryer with RAP Introduced in Continuous Mixing Device

By changing the dryer configuration to a counter-flow dryer design (aggregate travels against the gas flow), excessively high process gas temperatures can be eliminated (Figure 20). This is because high process gas temperatures are reduced by cooler, moisture-laden aggregate as the gasses evacuate the dryer. Depending on the flighting design of the dryer and the dryer length, aggregate can be superheated to elevated temperatures for conductive heat transfer to the RAP without exceeding practical limits for baghouse operating temperatures (typically accepted to be 400°F).

With this design, RAP percentages are still limited by the length of the mixing device which affects the duration of time that cool, wet, ambient RAP is exposed to hot, dry virgin aggregates.

Steam is typically exhausted to the combustion area of the dryer. Hydrocarbons carried in this air stream are destroyed in the hot combustion area of the dryer.

FIGURE 20
Counter-Flow Dryer with RAP Added in Continous Mixer

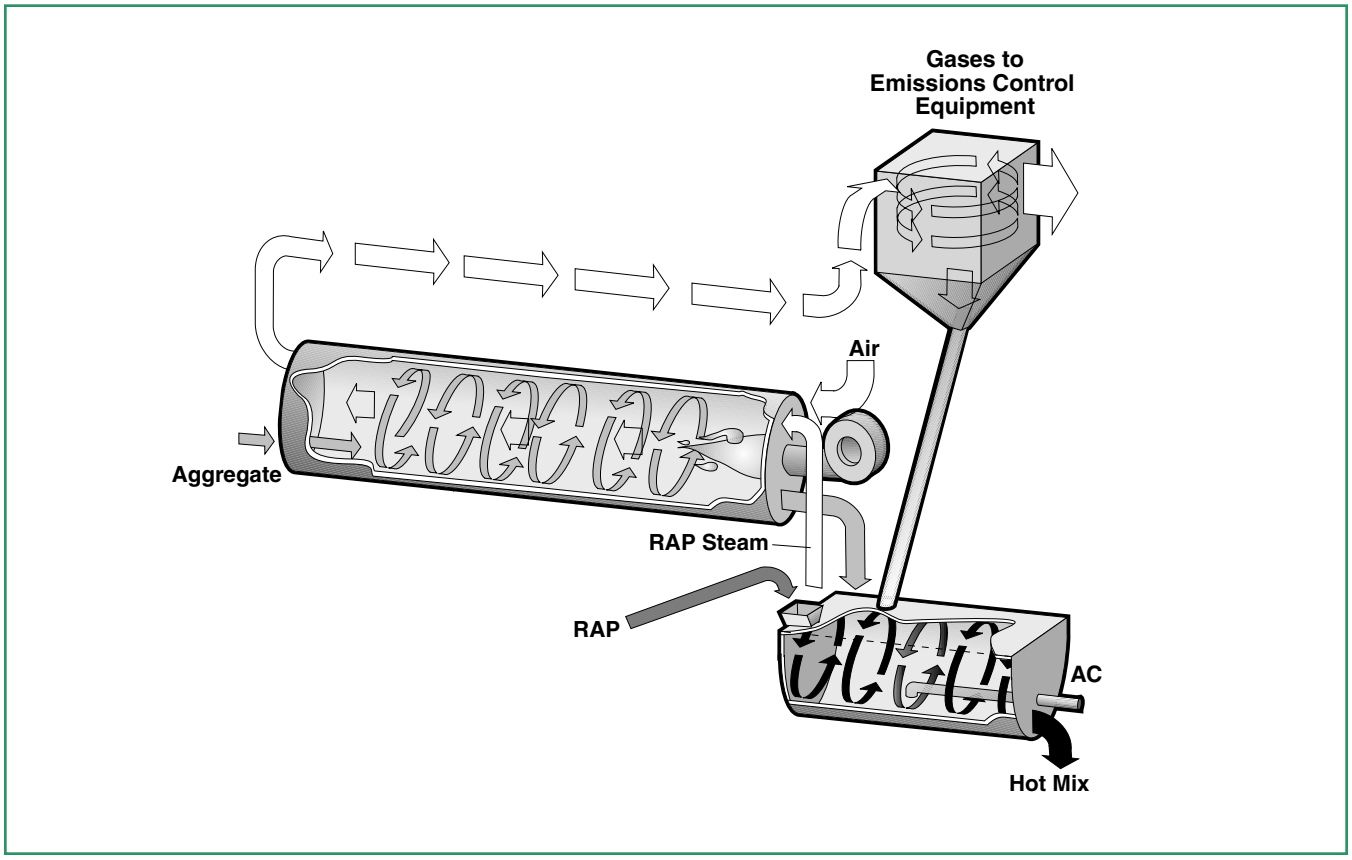

Counter-Flow Dryer with RAP Introduced in the Aggregate Dryer

By adding a heat exchange chamber to the aggregate dryer, RAP can be heated with virgin aggregate in the combustion area of the dryer to raise the percentage of RAP that can be utilized with a counterflow dryer design (Figure 21). Higher RAP percentages are possible because RAP has a longer residence time with the superheated virgin aggregates, and because RAP is heated conductively with aggregate in the vicinity of the hottest part of the dryer shell. Steam from the RAP is exhausted directly into the aggregate dryer with the virgin aggregate steam.

Counter-Flow Drum Mixer

A counter-flow drum mixer uses a similar RAP introduction method together with a continuous mixing device which is fixed and made part of the shell (Figure 22). Essentially, a counter-flow drum mixer is a unitized dryer and continuous mixing drum in one unit. In this system, the virgin aggregate is heated convectively, the RAP is heated conductively, and the new liquid asphalt cement, recycled fines from the primary and secondary collector, and other bulk and liquid additives are added in the mixing section that is attached and rotating with the shell. Steam that is released from the RAP is exhausted with the steam from the virgin aggregate.

Unitized Counter-Flow Dryer and Continuous Mixer

A marriage between a counter-flow aggregate dryer and continuous pugmill mixing device creates a unitized dryer and mixing device (Figure 23).Rather distinctive in appearance to other equipment approaches, mixing paddles here are fixed to the outside of the aggregate dryer. The aggregate passes through the inside of the counter-flow dryer, and then is discharged into a fixed outer mixing shell where the mixing paddles move the virgin aggregate "uphill" through a mixing bed from between the rotating drying shell and the fixed outer mixing shell. RAP is introduced at this point, along with: new liquid asphalt cement, recycled fines from the air pollution control equipment, liquid additives, and other bulk materials to produce the final hot mix product. The final product is discharged toward the feed end of the dryer.

FIGURE 21
RAP Added in Counter-Flow Aggregate Dryer

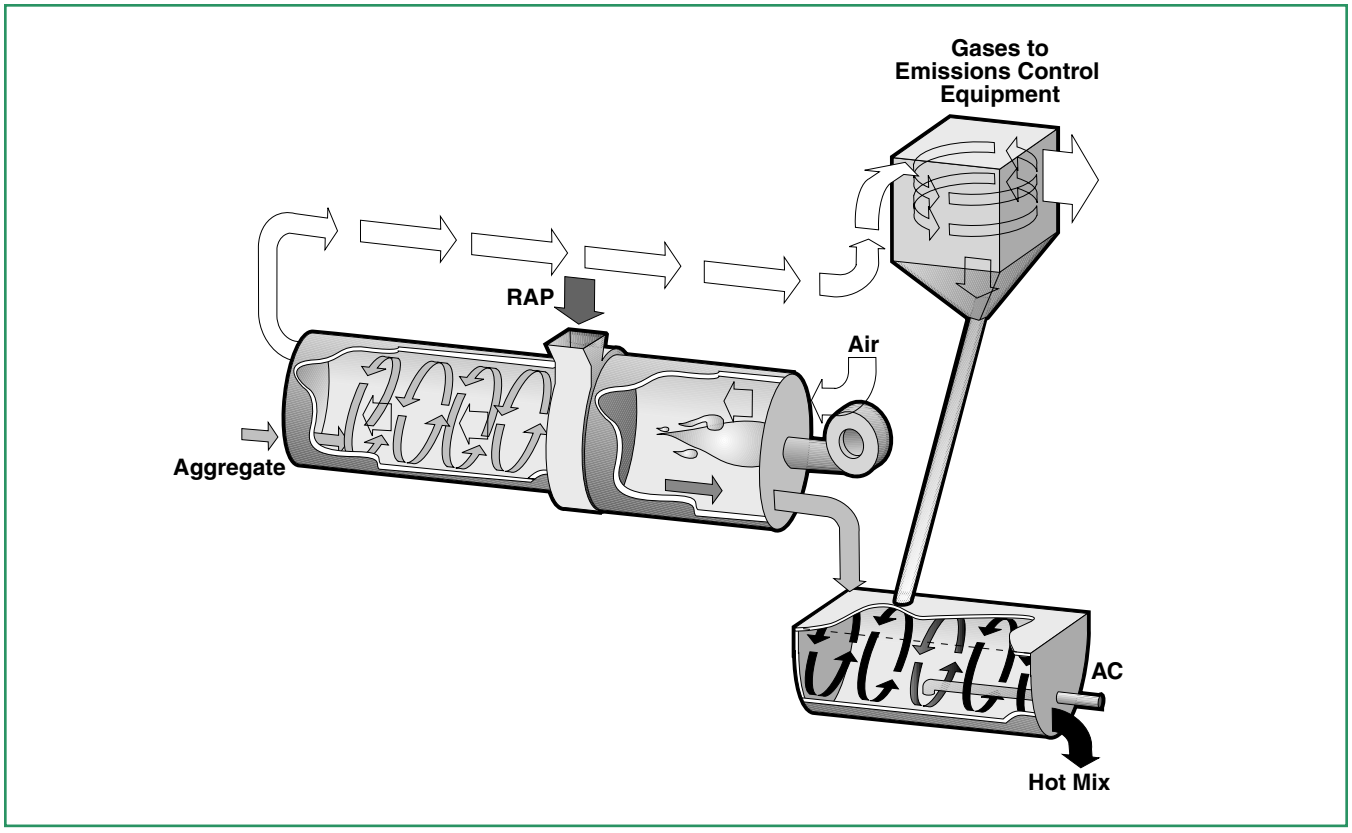

FIGURE 22
RAP in a Counter-Flow Drum Mixer

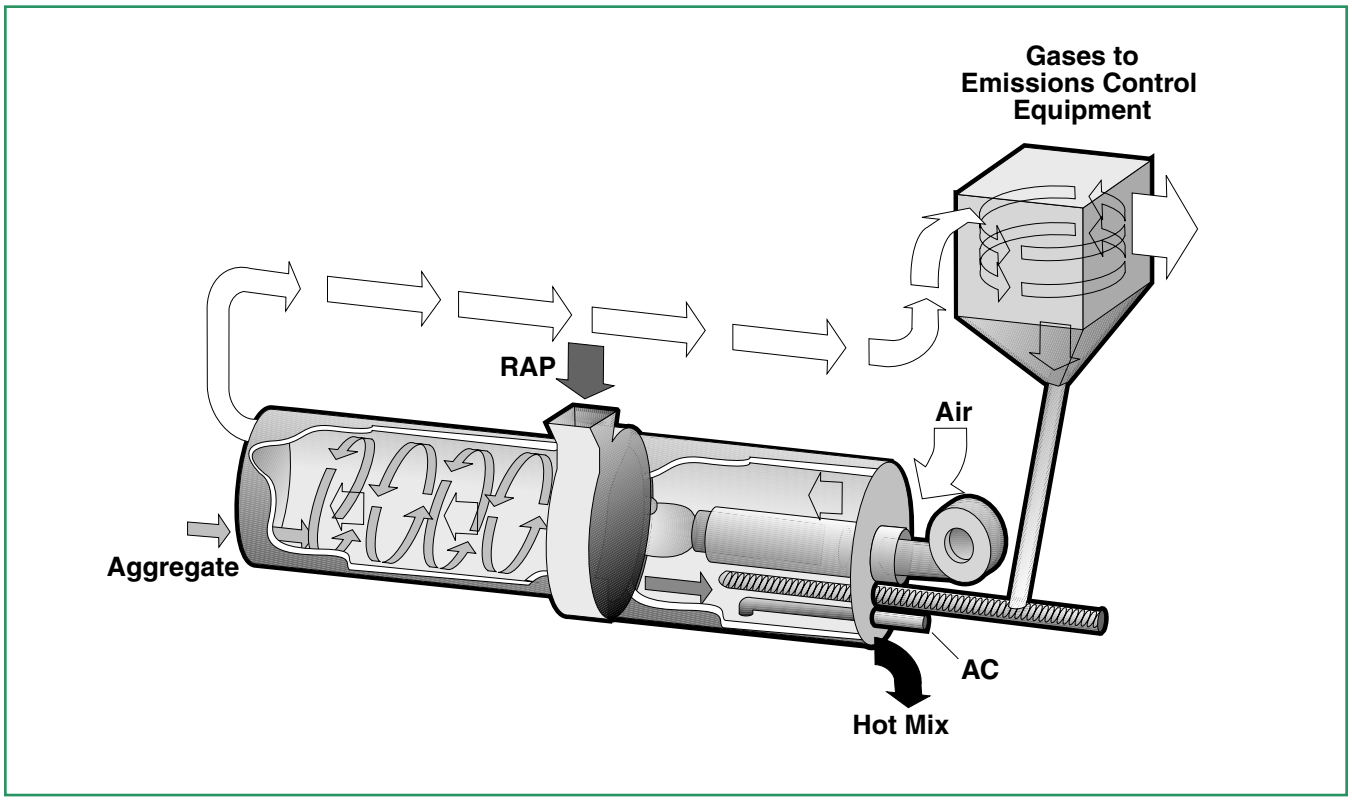

FIGURE 23
RAP Added in Unitized Dryer/Mixer

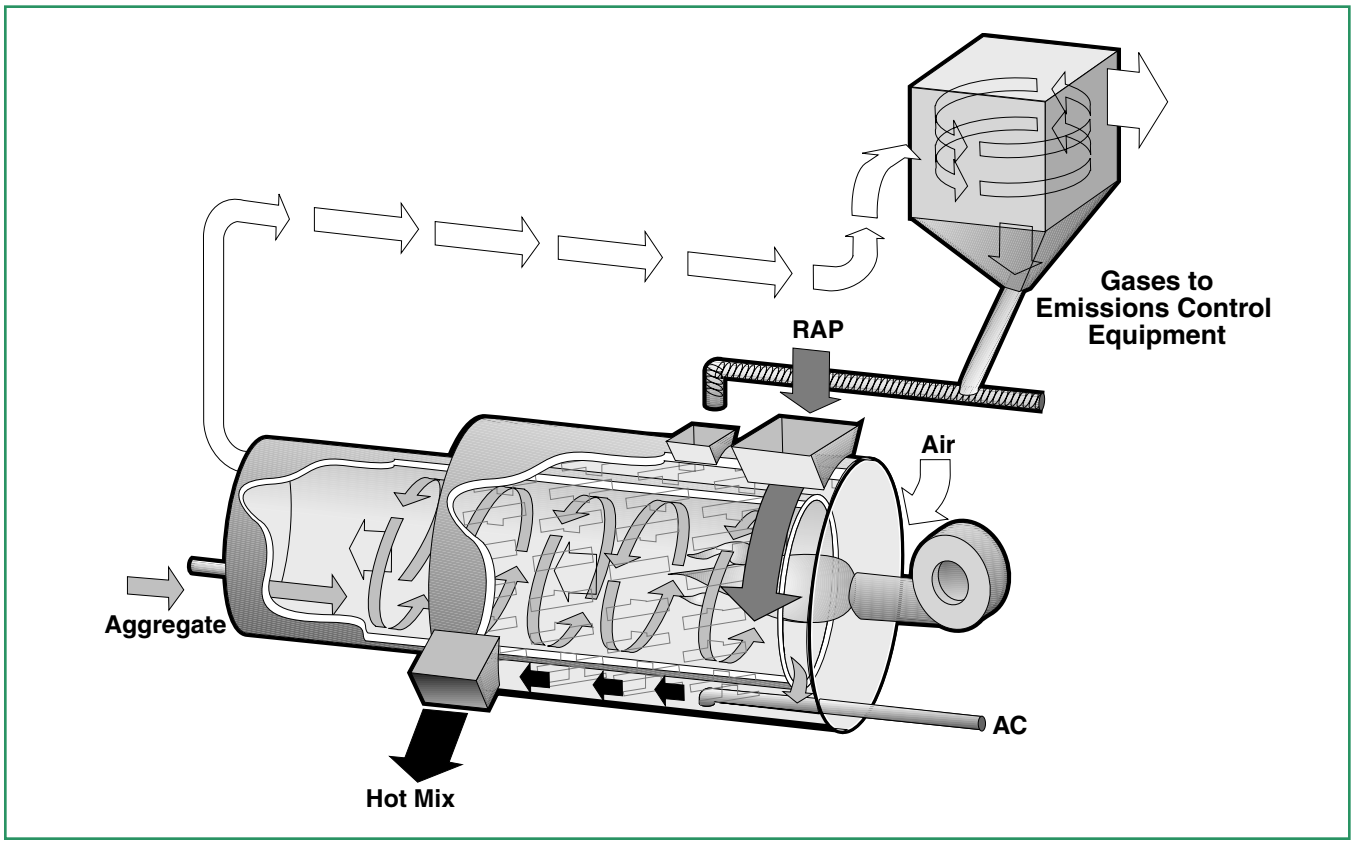

Steam from the RAP is exhausted to the air pollution control equipment with steam from the virgin aggregates. The RAP benefits from additional conductive heat transfer from the combustion area of the drying shell.

Specialized Facilities for High-Percentage Recycling

Over the years, several different approaches to recycling have been researched in an effort to raise RAP percentages beyond the 50% practical limit that seems to be associated with conventional technologies.

Two approaches are notable: one, due to its reoccurring adaptation of the concept of indirect heat transfer; the other, due to its distinctive nature and the volume of recycled hot mix.

Indirect Heat Transfer Methods

With an "indirect" heat transfer approach, RAP is heated in a rotating dryer, but not with convective gasses. Conductive heat is used to heat the RAP via "flues" or "tubes" that carry the burner exhaust gasses through the dryer. The RAP passes between these tubes or flues and is, therefore, heated conductively in an indirect fashion.

As a result, little or no hydrocarbon vapor is emitted from the gas stream carrying the steam off the RAP.

Depending on the efficiency of the drying burner, excellent hydrocarbon emission levels can be achieved with this approach. The summary emission constituents are primarily steam from one source and primarily standard combustion emissions from the other.

RAP can be conveyed to a batch or continuous-flow facility for blending with virgin aggregates at high percentages, as shown in Figure 24, or can be blended with asphalt cement conditioners and rejuvenators for 100% recycling.

Microwave Heat Transfer Technology

The goal for "microwave" recycling has been to consistently produce 100% recycled mixes. As with the indirect heat transfer method, however, stone gradation control considerations can limit RAP content to below 100%. The RAP may have more fine ag-gregate sizes than the final mix desired, forcing RAP percentages down with the introduction of small amounts of coarse virgin rock.

Conventional, convective heat transfer is used (with either a parallel-flow or counter-flow dryer) to dry and heat the RAP to an elevated temperature, and a microwave heater is employed in the final stages to raise the material to the desired paving temperature (Figure 25). The gas stream from the convective heat transfer dryer passes through a conventional baghouse fabric filter collector with addi-

FIGURE 24
Indirect Heat Transfer

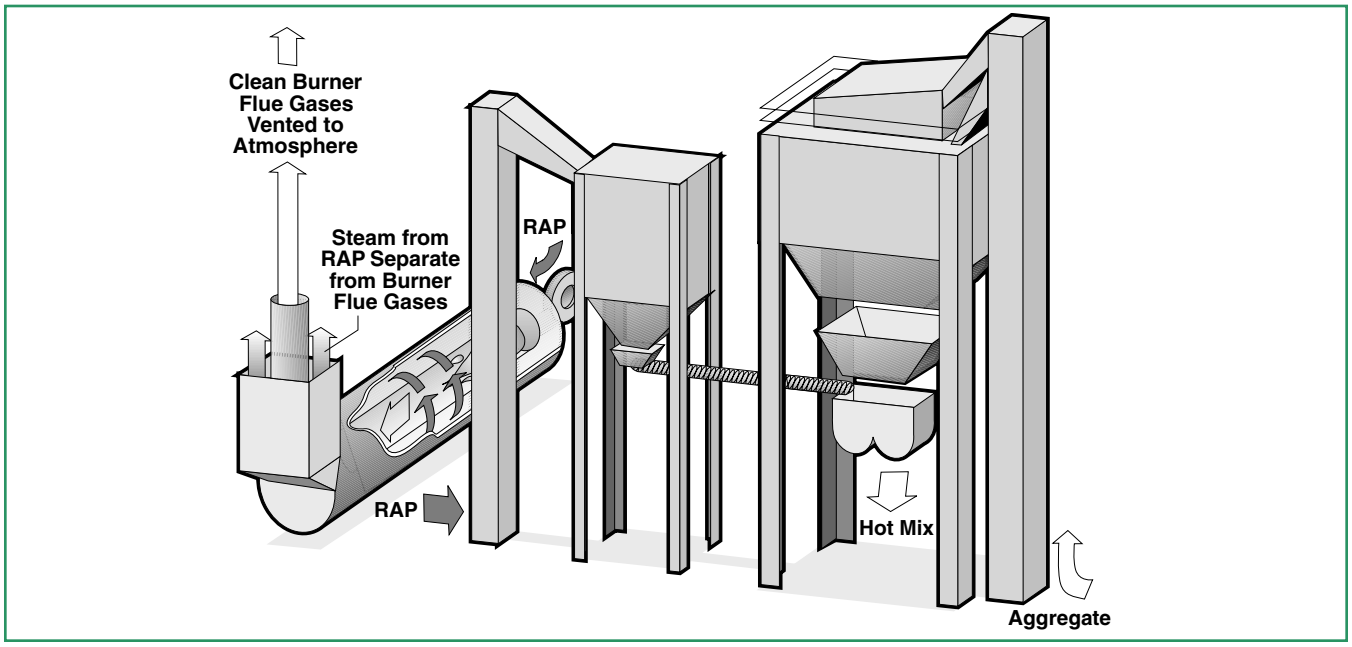

tional equipment added to remove the hydrocarbons, if they are excessively high, from the gas flow.

The use of microwave heating to produce paving materials is proprietary, but has been used to produce a significant amount of tonnage in several states throughout the country.

NOTE: Caution is warranted when using mixes with 100% RAP. Slight variations in RAP material that are acceptable when blending with virgin materials may not produce an acceptable mix using 100% RAP.

Laydown and Compaction

No special techniques or equipment are required for laydown and compaction when using recycled mixes. However, recycled mixes are frequently placed at slightly cooler temperatures than virgin mixes in an effort to reduce the negative impact of superheated temperatures on the facility equipment. With slightly cooler mat temperatures and, depending on the RAP percentages used in the mix, paving personnel may find that rolling and compac-

FIGURE 25
Microwave Heat Transfer

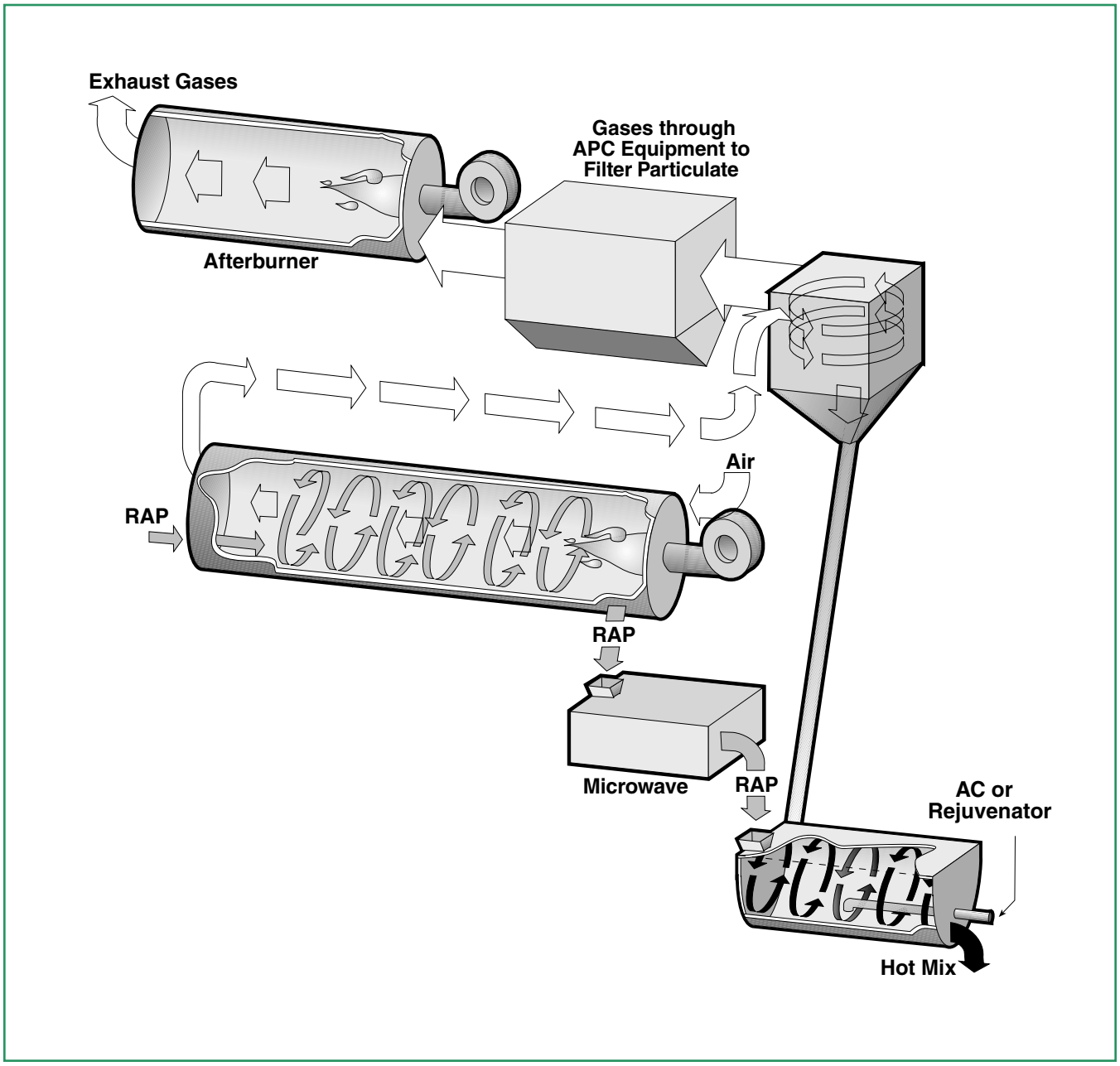

tion times are reduced. Conventional equipment, conventional techniques, and conventional indicators of a completed mat apply.

Paving superintendents frequently claim that recycled mixes are "stiffer." Translated, this means, that the rollers and compactors need to "get on the mat" quickly and get their job done. Densities are typically achieved faster than with mixes made from all virgin materials. This is the only difference typically encountered when paving with recycled mixes.

Summary and Observations

Industry experience in the last twenty years has proven that Hot Mix Asphalt is a resource that can be recycled time after time for the public's service. From an operations perspective, the following observations on using RAP can be made:

- Since the late 1970s, various processing technologies have been developed to permit HMA facilities to be retrofitted for using various percentages of RAP.
- Research has proven that recycled pavements offer the same durability as pavements constructed with 100% virgin materials, but with significant cost savings to the public and private consumer.
- Visible and gaseous emission considerations have been addressed, and process technology has been developed to maintain acceptable air quality.
- Crushing, screening, and sampling techniques have been developed so that even RAP from various and different sources can be combined, blended, and processed and quality pavements can be constructed.

From the perspective of the traveling public:

- RAP saves money in areas where high-quality aggregates are scarce.
- Recycling HMA is truly a "win-win" scenario.
  - The consumer wins with lower costs of construction and rehabilitation without compromising quality. This stretches tax dollars allowing more roads to be kept in better driving condition than if all virgin materials are used.
  - The public also wins by reduced volume of construction rubble in landfills and dumping sites.
  - The construction industry wins because higher volumes of production from the same fixed investment lowers business risk, and keeps more people employed.
- In some areas, recycling hot mix asphalt pavement is a "standard operating procedure." The future promises that recycling hot mix asphalt pavement will become the "standard operating procedure" for all areas.

These reasons suggest in the future more and more new HMA pavements will be constructed with Reclaimed Asphalt Pavement as a significant portion of final mix.

Bibliography

Fugitive Dust Control and the Hot-Mix Plant (IS-73), National Asphalt Pavement Association (NAPA), Lanham, MD, 1980.

The Fundamentals of the Operation and Maintenance of the Exhaust Gas System in a Hot Mix Asphalt Facility (IS-52), 2nd rev. ed., National Asphalt Pavement Association (NAPA), Lanham, MD, 1995.

Hot Recycling in Hot Mix Batch Plants (IS-71), National Asphalt Pavement Association (NAPA), Lanham, MD 1985.

Mix Design Methods for Asphalt Concrete and Other Hot-Mix Types, 6th ed., Asphalt Institute, Lexington, 1993.

Occurrence and Utilization of Mineral and Construction Wastes, ARUP Economics and Planning–Department of the Environment, ARUP, London, 1991.

Page, Gale C., "Florida's Experience in Hot-Mix Asphalt Recycling," *Hot Mix Asphalt Technology,* Spring 1988.

A Study of the Use of Recycled Paving Material, Report to Congress June 1993, U.S. Department of Transportation–Federal Highway Administration, FHWA-RD-93-147, 1993.

Appendix:
Calculating the Costs of Using Reclaimed Asphalt Pavement

Reclaimed Asphalt Pavement (RAP) is a valuable resource to both public and private consumers. Not only does the use of RAP in new Hot Mix Asphalt reduce the amount of construction rubble in landfills, but it also lowers the cost of producing a ton of hot mix. The cost reduction is ultimately passed on, in one way or another, through the reduced price of paving materials and overlay projects.

The cost savings possible from using RAP can be calculated by taking the savings available from reduced new liquid asphalt cement content and aggregate, and subtracting the costs associated in reclaiming and the processing the RAP for use.

The following table can be used to determine the net savings of RAP use. Note: This method assigns separate costs for fine and coarse aggregate which assumes the RAP is further processed into two stockpiles for maximum utilization and flexibility. If only one stockpile of RAP is maintained, only one aggregate component is needed.

	Calculating the Cost of Using RAP in Hot Mix Asphalt	
A	Savings from Asphalt Cement: New AC $/ton ( ) x AC % in Mix ( ) x % of RAP in Mix ( )	Per ton: $
B	Savings from Fine Aggregate: New Fine Agg. $/ton ( ) x % Fine Agg. in Mix ( ) x of RAP in Mix ( )	$
C	Savings from Coarse Aggregate: New Coarse Agg. $/ton ( ) x % Coarse Agg. in Mix ( ) x % RAP in Mix ( )	$
D	**Total Gross Savings per ton of Hot Mix (Add A + B + C)**	**$**
E	Less Acquisition Cost of RAP (includes Trucking Cost): Acquisition Cost $/ton ( ) x % of RAP in Hot Mix ( )	$
F	Less Additional Processing/Crushing: Process/Crushing Cost $/ton ( ) x % of RAP in Hot Mix ( )	$
G	Less any Additional Miscellaneous Cost: Miscellaneous Cost $/ton ( ) x % of RAP in Hot Mix ( )	$
H	**Net Savings per ton of Hot Mix Asphalt (D less E, F & G)**	**$**

SI* (MODERN METRIC) CONVERSION FACTORS

APPROXIMATE CONVERSION TO SI UNITS

Symbol	When You Know	Multiply By	To Find	Symbol
LENGTH				
inches	inches	25.4	millimeters	mm
ft	feet	0.305	meters	m
yd	yards	0.914	meters	m
mi	miles	1.61	kilometers	km
AREA				
in^2	square inches	645.2	millimeters squared	mm^2
ft^2	square feet	0.093	meters squared	m^2
yd^2	square yards	0.836	meters squared	m^2
ac	acres	0.405	hectares	ha
mi^2	square miles	2.59	kilometers squared	km^2
VOLUME				
fl oz	fluid ounces	29.57	milliliters	mL
gal	gallons	3.785	liters	L
ft^3	cubic feet	0.028	meters cubed	m^3
yd^3	cubic yards	0.765	meters cubed	m^3
NOTE: Volumes greater than 1000 L shall be shown in m^3.				
MASS				
oz	ounces	28.35	grams	g
lb	pounds	0.454	kilograms	kg
T	short tons (2000 lb)	0.907	megagrams	Mg
TEMPERATURE (exact)				
°F	Fahrenheit temperature	5(F-32)/9	Celsius temperature	°C

APPROXIMATE CONVERSION FROM SI UNITS

Symbol	When You Know	Multiply By	To Find	Symbol
LENGTH				
mm	millimeters	0.039	inches	in
m	meters	3.28	feet	ft
m	meters	1.09	yards	yd
km	kilometers	0.621	miles	mi
AREA				
mm^2	millimeters squared	0.0016	square inches	in^2
m^2	meters squared	10.764	square feet	ft^2
ha	hectares	2.47	acres	ac
km^2	kilometers squared	0.386	square miles	mi^2
VOLUME				
mL	milliliters	0.034	fluid ounces	fl oz
L	liters	0.264	gallons	gal
m^3	meters cubed	35.315	cubic feet	ft^3
m^3	meters cubed	1.308	cubic yards	yd^3
MASS				
g	grams	0.035	ounces	oz
kg	kilograms	2.205	pounds	lb
Mg	megagrams	1.102	short tons(2000 lb)	T
TEMPERATURE (exact)				
°C	Celsius temperature	1.8C + 32	Fahrenheit temperature	°F

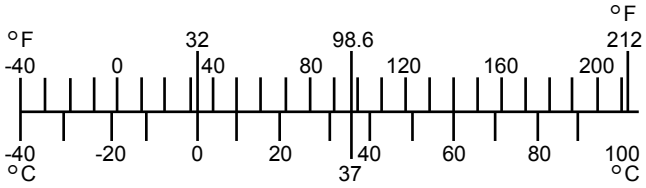

*SI is the symbol for the International System of Measurement.

NAPA: THE SOURCE

This publications is one of the many technical, informational, and promotional publications available from the National Asphalt Pavement Association (NAPA). To obtain a complete listing, please request on your letterhead a copy of our current publications catalog:

Publications Department, National Asphalt Pavement Association
NAPA Building, 5100 Forbes Boulevard, Lanham, MD USA 20706-4407
Toll Free: 888-468-6499 ● Tel: 301-731-4748 ● Fax: 301-731-4621
www.hotmix.org

National Asphalt Pavement Association
NAPA Building
5100 Forbes Blvd.
Lanham, Maryland 20706-4407
Tel: (301) 731-4748/Fax: (301) 731-4621

HMA
HOT MIX ASPHALT